TDA2003

10W CAR RADIO AUDIO AMPLIFIER

DESCRIPTION

The TDA 2003 has improved performance with the same pin configuration as the TDA 2002.

The additional features of TDA 2002, very low number of external components, ease of assembly, space and cost saving, are maintained.

The device provides a high output current capability (up to 3.5A) very low harmonic and cross-over distortion.

Completely safe operation is guaranteed due to protection against DC and AC short circuit between all pins and ground, thermal over-range, load dump voltage surge up to 40V and fortuitous open ground.

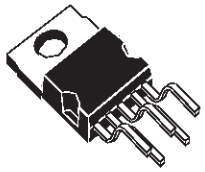

PENTAWATT

ORDERING NUMBERS : TDA 2003H
TDA 2003V

ABSOLUTE MAXIMUM RATINGS

Symbol	Parameter	Value	Unit
V_S	Peak supply voltage (50ms)	40	V
V_S	DC supply voltage	28	V
V_S	Operating supply voltage	18	V
I_O	Output peak current (repetitive)	3.5	A
I_O	Output peak current (non repetitive)	4.5	A
Ptot	Power dissipation at Tcase = 90°C	20	W
T_{stg}, T_j	Storage and junction temeperature	-40 to 150	°C

TEST CIRCUIT

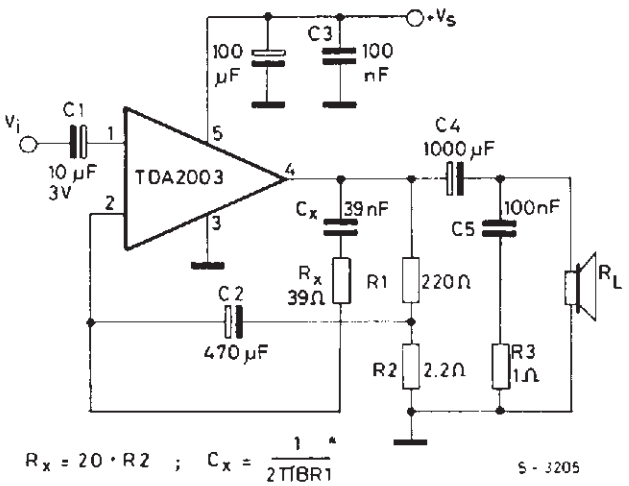

PIN CONNECTION (top view)

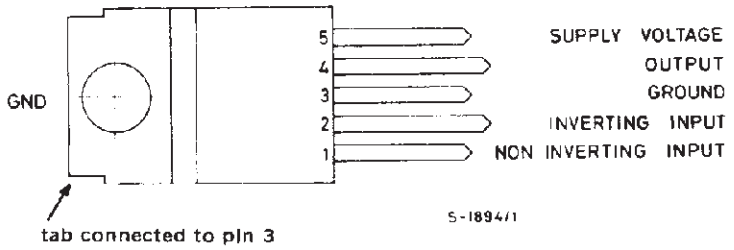

SCHEMATIC DIAGRAM

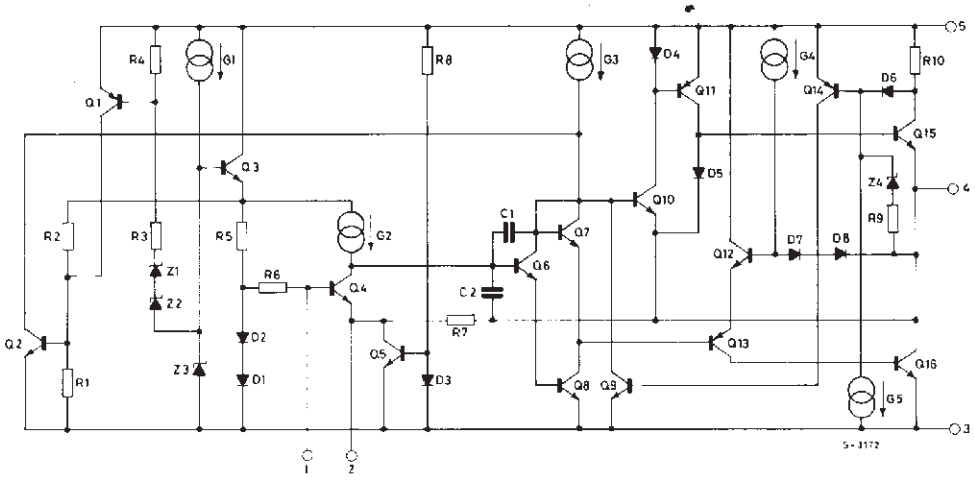

THERMAL DATA

Symbol	Parameter	Value	Unit
$R_{th\text{-}j\text{-}case}$	Thermal resistance junction-case max	3	°C/W

DC TEST CIRCUIT

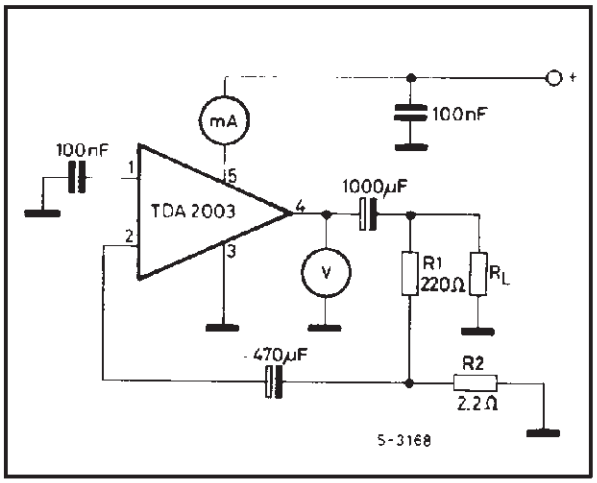

AC TEST CIRCUIT

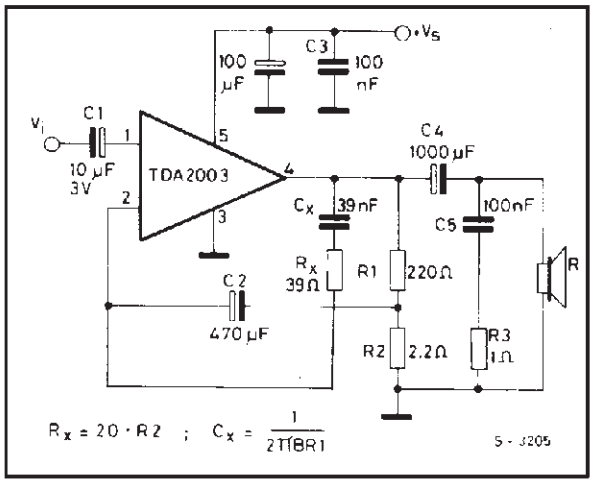

ELECTRICAL CHARACTERISTICS (V_s = 14.4V, T_{amb} = 25 °C unless otherwise specified)

Symbol	Parameter	Test conditions	Min.	Typ.	Max.	Unit
DC CHARACTERISTICS (Refer to DC test circuit)						
V_s	Supply voltage		8		18	V
V_o	Quiescent output voltage (pin 4)		6.1	6.9	7.7	V
I_d	Quiescent drain current (pin 5)			44	50	mA
AC CHARACTERISTICS (Refer to AC test circuit, Gv = 40 dB)						
P_o	Output power	d = 10% f = 1 kHz $R_L = 4\Omega$ $R_L = 2\Omega$ $R_L = 3.2\Omega$ $R_L = 1.6\Omega$	 5.5 9	 6 10 7.5 12		 W W W W
$V_{i(rms)}$	Input saturation voltage		300			mV
V_i	Input sensitivity	f = 1 kHz P_o = 0.5W $R_L = 4\Omega$ P_o = 6W $R_L = 4\Omega$ P_o = 0.5W $R_L = 2\Omega$ P_o 10W $R_L = 2\Omega$		 14 55 10 50		 mV mV mV mV

ELECTRICAL CHARACTERISTICS (continued)

Symbol	Parameter	Test conditions	Min.	Typ.	Max.	Unit
B	Frequency response (-3 dB)	P_o = 1W R_L = 4Ω	40 to 15,000			Hz
d	Distortion	f = 1 kHz P_o = 0.05 to4.5W R_L = 4Ω P_o = 0.05 to 7.5W R_L = 2Ω		 0.15 0.15		 % %
R_i	Input resistance (pin 1)	f = 1 kHz	70	150		kΩ
G_v	Voltage gain (open loop)	f = 1 kHz f = 10 kHz		80 60		dB dB
G_v	Voltage gain (closed loop)	f = 1 kHz R_L = 4Ω	39.3	40	40.3	dB
e_N	Input noise voltage (0)			1	5	µV
i_N	Input noise current (0)			60	200	pA
η	Efficiency	f = 1 Hz P_o = 6W R_L = 4Ω P_o = 10W R_L = 2Ω		 69 65		 % %
SVR	Supply voltage rejection	f = 100 Hz V_{ripple} = 0.5V R_g = 10 kΩ R_L = 4Ω	30	36		dB

(0) Filter with noise bandwidth: 22 Hz to 22 kHz

Figure 1. Quiescent output voltage vs. supply voltage

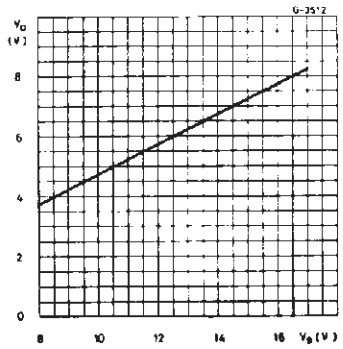

Figure 2. Quiescent drain current vs. supply voltage

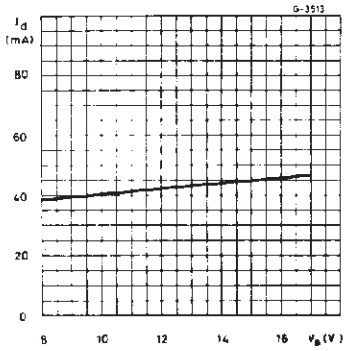

Figure 3. Output power vs. supply voltage

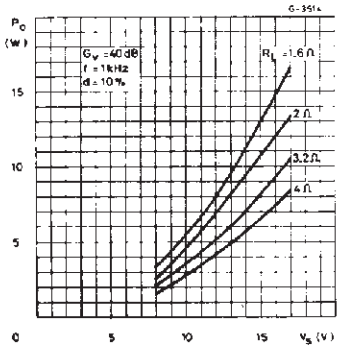

Figure 4. Output power vs. load resistance R_L

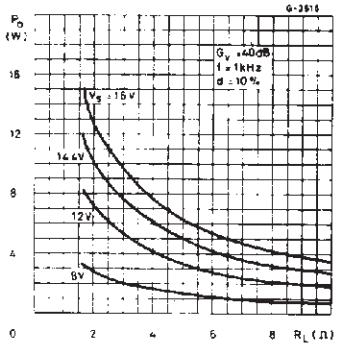

Figure 5. Gain vs. input sensivity

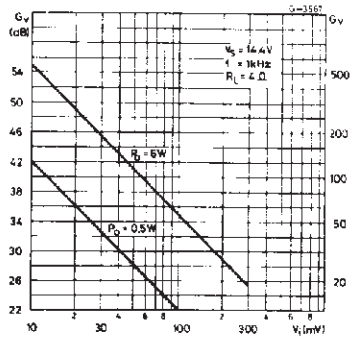

Figure 6. Gain vs. input sensivity

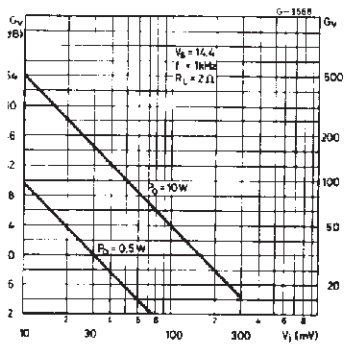

Figure 7. Distortion vs. output power

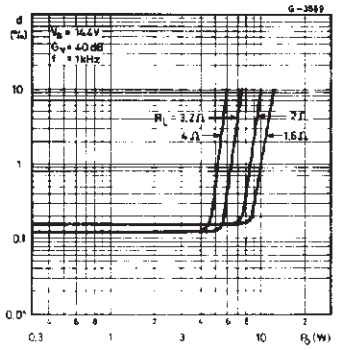

Figure 8. Distortion vs. frequency

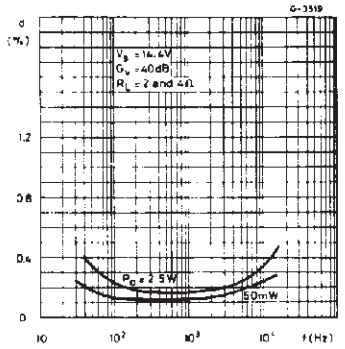

Figure 9. Supply voltage rejection vs. voltage gain

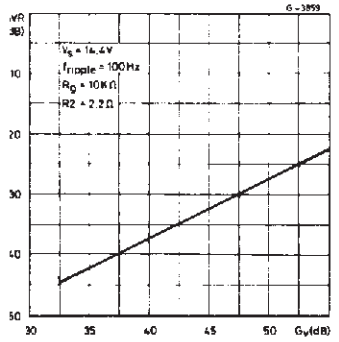

Figure 10. Supply voltage rejection vs. frequency

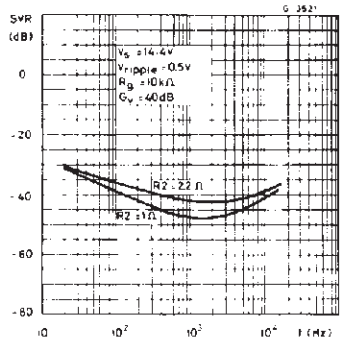

Figure 11. Power dissipation and efficiency vs. output power (R_L = 4Ω)

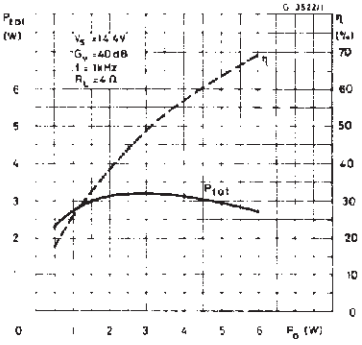

Figure 12. Power dissipation and efficiency vs. output power (R_L = 2Ω)

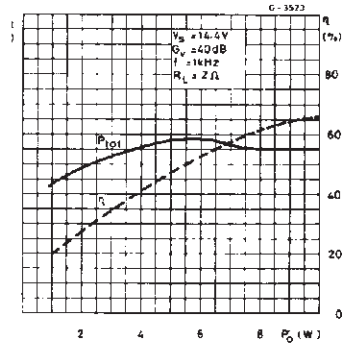

Figure 13. Maximum power dissipation vs. supply voltage (sine wave operation)

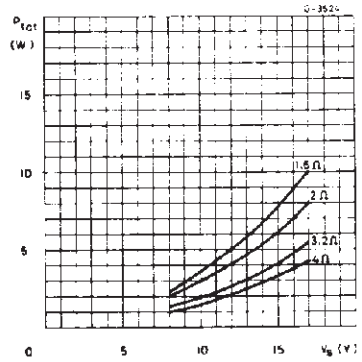

Figure 14. Maximum allowable power dissipation vs. ambient temperature

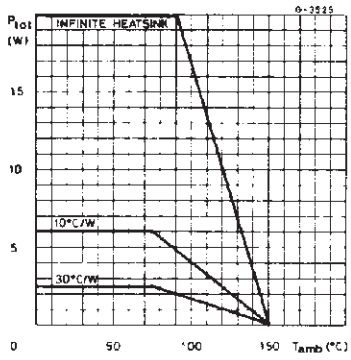

Figure 15. Typical values of capacitor (C_X) for different values of frequency reponse (B)

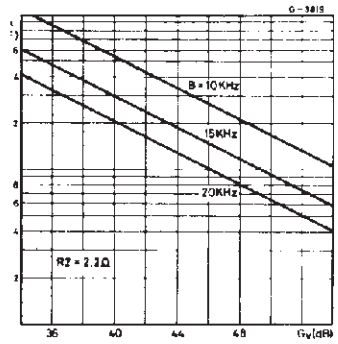

APPLICATION INFORMATION

Figure 16. Typical application circuit

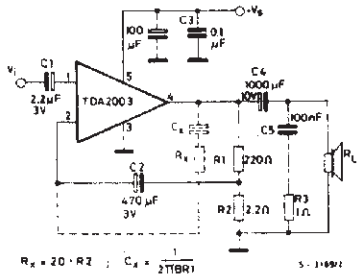

Figure 17. P.C. board and component layout for the circuit of fig. 16 (1 : 1 scale)

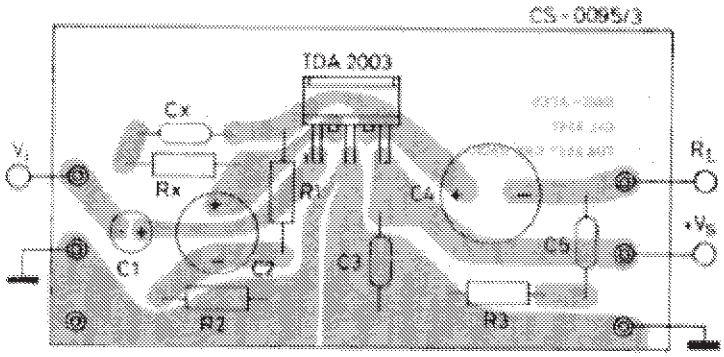

BUILT-IN PROTECTION SYSTEMS

Load dump voltage surge

The TDA 2003 has a circuit which enables it to withstand a voltage pulse train, on pin 5, of the type shown in fig. 19.

If the supply voltage peaks to more than 40V, then an LC filter must be inserted between the supply and pin 5, in order to assure that the pulses at pin 5 will be held within the limits shown in fig. 18.

A suggested LC network is shown in fig. 19. With this network, a train of pulses with amplitude up to 120V and width of 2 ms can be applied at point A. This type of protection is ON when the supply voltage (pulsed or DC) exceeds 18V. For this reason the maximum operating supply voltage is 18V.

Figure 18.

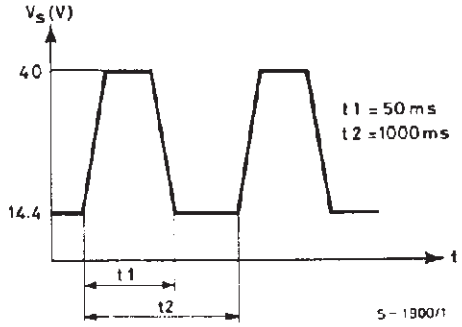

Figure 19.

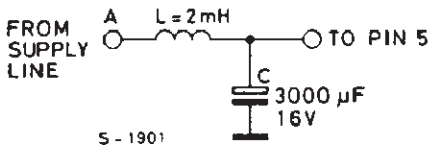

Short-circuit (AC and DC conditions)

The TDA 2003 can withstand a permanent short-circuit on the output for a supply voltage up to 16V.

Polarity inversion

High current (up to 5A) can be handled by the device with no damage for a longer period than the blow-out time of a quick 1A fuse (normally connected in series with the supply).

This feature is added to avoid destruction if, during fitting to the car, a mistake on the connection of the supply is made.

Open ground

When the radio is in the ON condition and the ground is accidentally opened, a standard audio amplifier will be damaged. On the TDA 2003 protection diodes are included to avoid any damage.

Inductive load

A protection diode is provided between pin 4 and 5 (see the internal schematic diagram) to allow use of the TDA 2003 with inductive loads.

In particular, the TDA 2003 can drive a coupling transformer for audio modulation.

DC voltage

The maximum operating DC voltage on the TDA 2003 is 18V.

However the device can withstand a DC voltage up to 28V with no damage. This could occur during winter if two batteries were series connected to crank the engine.

Thermal shut-down

The presence of a thermal limiting circuit offers the following advantages:

1) an overload on the output (even if it is permanent), oran excessive ambient temperature can be easily withstood.
2) the heat-sink can have a smaller factor compared with that of a conventional circuit.
   There is no device damage in the case of excessive junction temperature: all that happens is that P_o (and therefore P_{tot}) and I_d are reduced.

Figure 20. Output power and drain current vs. case temperature (R_L = 4Ω)

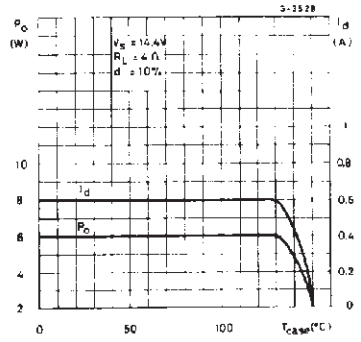

Figure 21. Output power and drain current vs. case temperature (R_L = 2Ω)

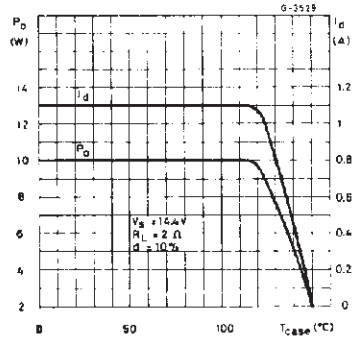

PRATICAL CONSIDERATION

Printed circuit board

The layout shown in fig. 17 is recommended. If different layouts are used, the ground points of input 1 and input 2 must be well decoupled from the ground of the output through which a rather high current flows.

Assembly suggestion

No electrical insulation is required between the package and the heat-sink. Pin length should be as short as possible. The soldering temperature must not exceed 260°C for 12 seconds.

Application suggestions

The recommended component values are those shown in the application circuits of fig. 16. Different values can be used. The following table is intended to aid the car-radio designer.

Component	Recommmended value	Purpose	Larger than recommended value	Smaller than recommended value C1
C1	2.2 μF	Input DC decoupling		Noise at switch-on, switch-off
C2	470 μF	Ripple rejection		Degradation of SVR
C3	0.1 μF	Supply bypassing		Danger of oscillation
C4	1000 μF	Output coupling to load		Higher low frequency cutoff
C5	0.1 μF	Frequency stability		Danger of oscillation at high frequencies with inductive loads
C_X	$\cong \frac{1}{2 \pi B R1}$	Upper frequency cutoff	Lower bandwidth	Larger bandwidth
R1	$(G_V-1) \bullet R2$	Setting of gain		Increase of drain current
R2	2.2 Ω	Setting of gain and SVR	Degradation of SVR	
R3	1 Ω	Frequency stability	Danger of oscillation at high frequencies with inductive loads	
R_X	≅ 20 R2	Upper frequency cutoff	Poor high frequency attenuation	Danger of oscillation

DIM.	mm			inch		
	MIN.	TYP.	MAX.	MIN.	TYP.	MAX.
A			4.8			0.189
C			1.37			0.054
D	2.4		2.8	0.094		0.110
D1	1.2		1.35	0.047		0.053
E	0.35		0.55	0.014		0.022
E1	0.76		1.19	0.030		0.047
F	0.8		1.05	0.031		0.041
F1	1		1.4	0.039		0.055
G	3.2	3.4	3.6	0.126	0.134	0.142
G1	6.6	6.8	7	0.260	0.268	0.276
H2			10.4			0.409
H3	10.05		10.4	0.396		0.409
L	17.55	17.85	18.15	0.691	0.703	0.715
L1	15.55	15.75	15.95	0.612	0.620	0.628
L2	21.2	21.4	21.6	0.831	0.843	0.850
L3	22.3	22.5	22.7	0.878	0.886	0.894
L4			1.29			0.051
L5	2.6		3	0.102		0.118
L6	15.1		15.8	0.594		0.622
L7	6		6.6	0.236		0.260
L9		0.2			0.008	
M	4.23	4.5	4.75	0.167	0.177	0.187
M1	3.75	4	4.25	0.148	0.157	0.167
V4	40° (typ.)					

OUTLINE AND MECHANICAL DATA

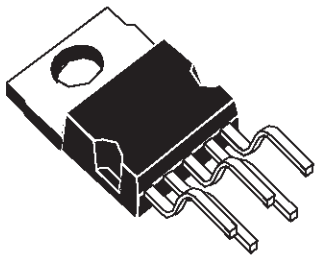

Pentawatt V

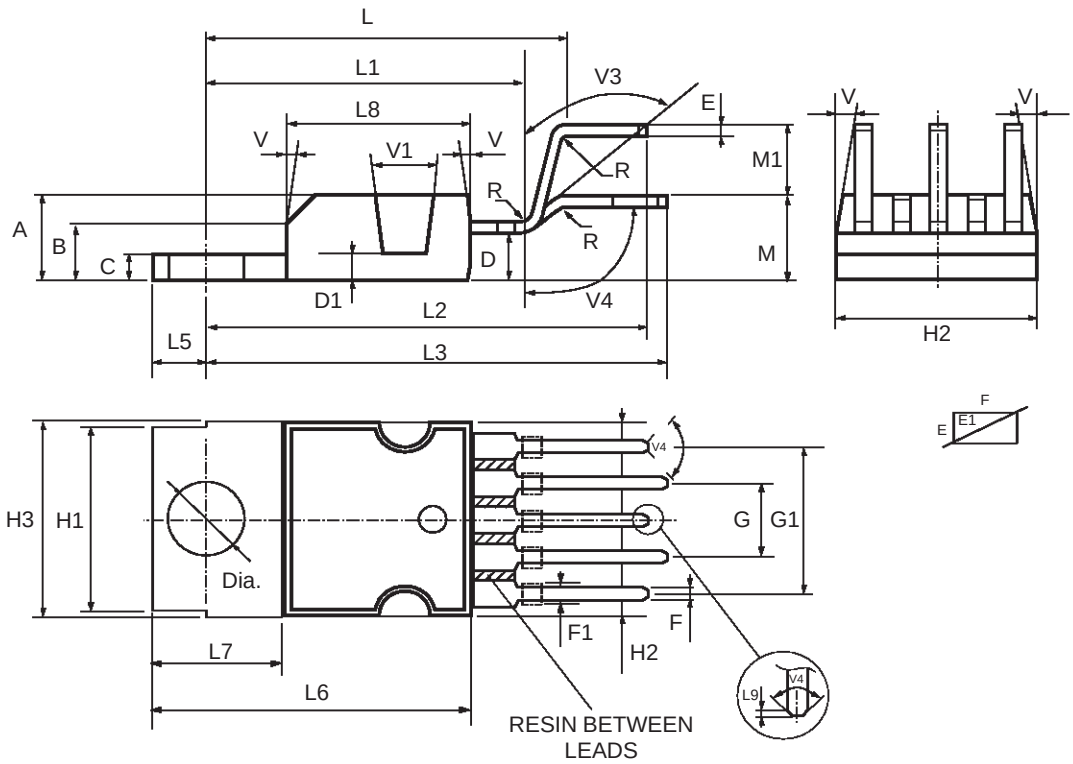

Information furnished is believed to be accurate and reliable. However, STMicroelectronics assumes no responsibility for the consequences of use of such information nor for any infringement of patents or other rights of third parties which may result from its use. No license is granted by implication or otherwise under any patent or patent rights of STMicroelectronics. Specification mentioned in this publication are subject to change without notice. This publication supersedes and replaces all information previously supplied. STMicroelectronics products are not authorized for use as critical components in life support devices or systems without express written approval of STMicroelectronics.

The ST logo is a registered trademark of STMicroelectronics

© 1998 STMicroelectronics – Printed in Italy – All Rights Reserved

STMicroelectronics GROUP OF COMPANIES

Australia - Brazil - Canada - China - France - Germany - Italy - Japan - Korea - Malaysia - Malta - Mexico - Morocco - The Netherlands - Singapore - Spain - Sweden - Switzerland - Taiwan - Thailand - United Kingdom - U.S.A.

http://www.st.com